DTL Operation

Assume; low input → 0.2 V and high input → 5.0 V

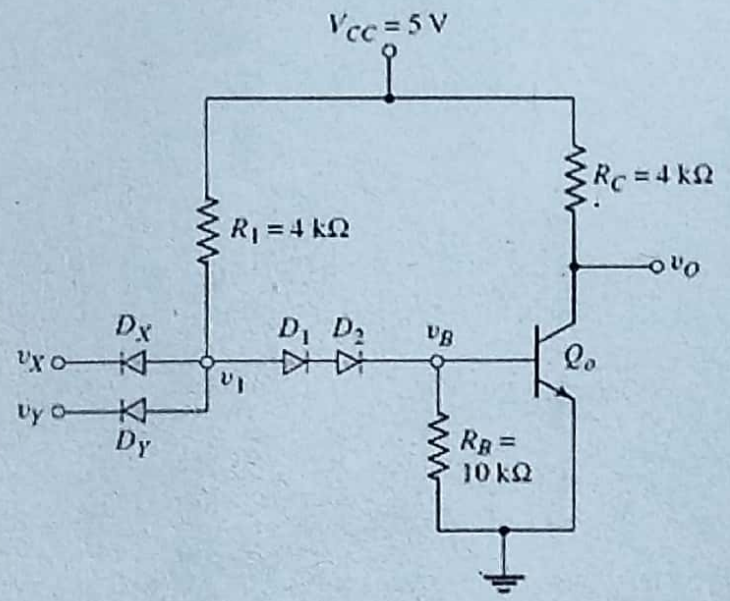

Input		State					Output
V_x	V_y	D_x	D_y	D_1	D_2	Q_0	V_0
0	0	ON	ON	OFF	OFF	OFF	1
0	1	ON	OFF	OFF	OFF	OFF	1
1	0	OFF	ON	OFF	OFF	OFF	1
1	1	OFF	OFF	ON	ON	ON	0

- If all inputs are high (5.0V), then the transistor Q_0 is saturated and If any inputs goes low (0.2V), then the transistor Q_0 is cuts off
- These conditions confirm the dynamic operation of a NAND gate using diode transistor logics
- The number of inputs can be increased by adding more input diodes

Exercise

Determine the currents and voltages in the DTL logic circuit when both inputs are high (5 V) and low (0.2 V). Assume the transistor parameters are as given in Table and β = 25. Validate the operational region of transistor Q_0 by analyzing your results under both conditions.

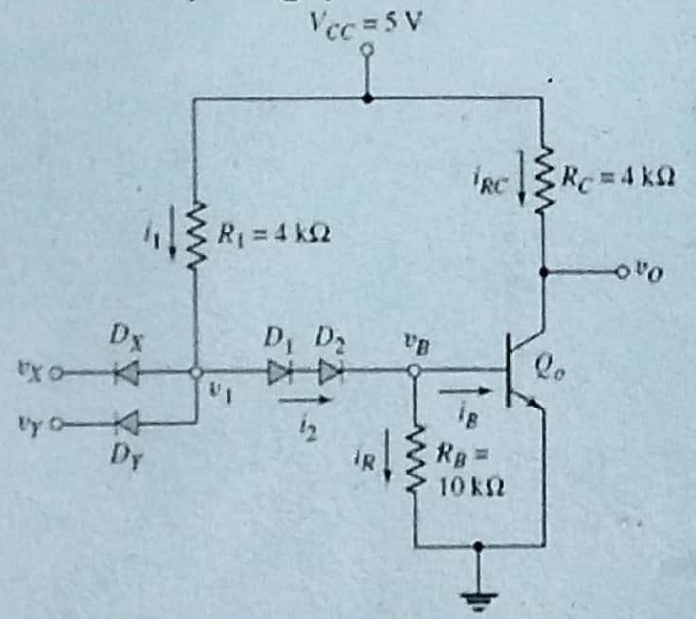

Table

Piecewise linear parameters for a pn junction diode and npn bipolar transistor

Parameter	Value
V_γ	0.7V
$V_{BE(on)}$	0.6V
$V_{BE(sat)}$	0.7V
$V_{CE(sat)}$	0.2 V

Diode turn on voltage

Solution:

When both inputs are low (Q_0 → Cutoff → V_0= High)

$V_1 = 0.9$ V $V_B = 0$ V $V_O = 5.0$ V

$I_1 = 1.025$ mA $I_2 = I_B = I_R = 0$ mA $I_{RC} = 0$ mA

Exercise

Determine the currents and voltages in the DTL logic circuit when both inputs are high (5 V) and low (0.2 V). Assume the transistor parameters are as given in Table and β = 25. Validate the operational region of transistor Q_0 by analyzing your results under both conditions.

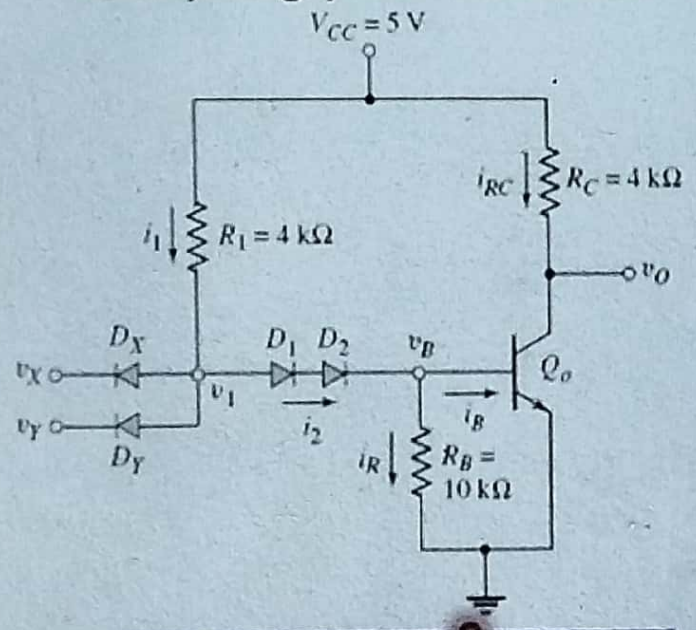

Table

Piecewise linear parameters for a pn junction diode and npn bipolar transistor

Parameter	Value
V_γ	0.7V
$V_{BE(on)}$	0.6V
$V_{BE(sat)}$	0.7V
$V_{CE(sat)}$	0.2 V

Diode turn on voltage → V_γ

Solution:

When both inputs are low (Q_0 → Cutoff → V_0= High)

$V_1 = 0.9$ V $V_B = 0$ V $V_O = 5.0$ V

$I_1 = 1.025$ mA $I_2 = I_B = I_R = 0$ mA $I_{RC} = 0$ mA

When both inputs are high (Q_0 → Saturated → V_0= Low)

$V_1 = 2.1$ V $V_B = 0.7$ V $V_O = 0.2$ V

$I_1 = I_2 = 0.725$ mA $I_B = 0.655$ mA $I_{RC} = 1.20$ mA

$I_R = 0.07$ mA

Transistor-Transistor Logic (TTL)

- Transistor-Transistor Logic (TTL) is a common digital circuit design that uses bipolar junction transistors.
- TTL logic gates are known for their fast switching speeds compared to RTL and DTL
- Despite their speed advantages, TTL circuits typically consume more power compared to some other logic families (CMOS; will discuss later).
- TTL remains widely used in various applications, balancing speed and power considerations based on specific design requirements
- TTLs are available in different types and their classification is done based on the output section as following.
    - Passive Pull-up TTL
    - Active Pull-up TTL
    - TTL Open Collector Output (will not discuss)
    - TTL Trisate